HE 5812

HIMOD® PROFIBUS-DP

System manual

(Englisch)

38100778

HESCH
AUTOMATION PARTNER

Disclaimer

HESCH Industrie-Elektronik GmbH
Boschstraße 8
D-31535 Neustadt
Germany
Tel. +49 (0) 5032 9535–0
Fax +49 (0) 5032 9535–99
Website: www.hesch.de
E-mail: info@hesch.de

District Court Hanover
HRB 111184
Tax no.: 34/200/22524
VAT no.: DE813919106

Executive Board:
Walter Schroeder, Werner Brandis
Publisher:
HESCH Industrie Elektronik GmbH, Documentation Department

Copyrights

Table of contents

System Manual HE 5812 Profibus DP Art.No. 38100778 Date: 11.12.2014

1 General

This document writes the ability of the fieldbus coupler HE5812 with PROFIBUS DP interface, in the following bus couplers mentioned, and the system ability of the different module devices of the HIMOD - family, in the following as " function module " defines. The term " device " covers both bus couplers and function modules.

Bus couplers with a PROFIBUS interface permit the transmission of process, parameter and configuration data. Field bus connection is via a sub-D socket at the top of the bus coupler. The serial communication interface facilitates connections to supervisory systems, visualization tools, etc.

Another standard interface is the non-bussable ‘SmartPort’ front-panel (PC) interface. It is used for direct connection of the ‘SmartControl’ tool which runs on a PC. Communication on the PROFIBUS DP takes place according to the Master/Slave principle. The bus coupler is always operated as slave.

Most important characteristics of the bus connection with their physical and electrical properties are:

- **Network topology**
  Linear bus, with bus termination at both ends.

- **Transmitting medium**
  protected, twisted 2 wire copper line

- **Conduit lengths (without Repeater)**
  Conduit length dependent on the data transmission rate, max. 1200m

- **Data transmission rates**
  The following transmission speeds are supported:
  9.6... 12000 kBit/s

- **Physical interface**
  R-S 485 over Sub CD plugs; Connection locally mountable

- **Addressing**
  1... 99

1.1 References

Further information to the PROFIBUS log:
[1] PROFESSIONAL BUS specifications
– http://www.profibus.com

Further documentations of the HIMOD of function modules:
– Instruction Manual
– Data sheet
– Control note

Fig. 1: Front view

HIMOD is an intelligent I/O system for all usual Fieldbus standards.
Each function module puts process values to the coupler at the disposal. The Fieldbus coupler is relieved by the inserted module processor by measured value calculations. The entrances and inputs are executed multi-functional and need the specification, here ' engineering ' mentioned.
This is deposited in the coupler, with interchange of a homogeneous module, also during the operation, the specification of the input/outputs is thus transferred.

1.2 GSD-file

The GSD file is available as a standard file with English texts (HE__093A.gsd). The current version can be downloaded from our homepage www.hesch.de in the HE 5812 description.

2 Safety hints

This device is built and checked and left the factory in safety-relevant perfect status in accordance with VDE 0411-1 / EN 61010-1.
The device corresponds with the European guideline 89/336/EWG (EMV) and with the CE flag is provided.
The device was checked before distribution and was existed the checks prescribed in the inspection scheme. In order to guarantee this status too received and a safe operation, the user the notes and warning notes, which are contained in this operating instruction, must considers and the device according to the operating instruction to operate.

⚠ **The device is exclusively intended for the use as measuring and controller in technical systems.**

⚠ **If the device indicates damage, which lets assume that a safe operation is not possible, then the device may be taken not in operation.**

ELECTRICAL CONNECTION
The electrical connections must conform to local standards (e.g. VDE 0100). The input leads must be kept separate from signal and mains leads.
A circuit breaker or a power switch must be provided for the device and marked accordingly in the installation. The circuit breaker or power switch must be installed near the device and should be easily accessible for the operator.

COMMISSIONING
Before device switch-on, ensure that the rules given below were followed::

- Before device switch-on, ensure that the rules given below were followed:
- Ensure that the supply voltage corresponds to the specification on the type label.
- All covers required for contact safety must be fitted.
- Before device switch-on, check, if other equipment and/or facilities connected in the same signal loop is / are not affected. If necessary, appropriate protective measures must be taken.
- The device may be operated only when mounted in its enclosure.
- The temperature limits specified for operation of the device must be met before and during operation.

⚠ **During operation, the ventilation slots of the housing must not be covered.**

⚠ **The measurement inputs are designed for measurement of circuits which are not connected directly with the mains supply (CAT I). The measurement inputs are designed for transient voltage peaks up to 800V against PE.**

SHUT-DOWN
For permanent shut-down, disconnect the instrument from all voltage sources and protect it against accidental operation.
Before instrument switch-off, check that other equipment and / or facilities connected in the same signal loop is / are not affected. If necessary, appropriate measures must be taken.

2.1 Maintenance, modification and repair

The devices need no particular maintenance.
No operable controls are mounted inside the device, i.e. the operator must not open it.
Modification, maintenance and repair may be carried out only by trained, authorized persons. For this purpose, the user is invited to contact HESCH.

When opening the devices, or when removing covers and components, live parts or terminals can be exposed

Attention
When opening the devices elements can be opened, which are sensitive to electrostatic discharge (ESD).

2.2 Cleaning

The housing and the device front can be cleaned with a dry, lint free cloth.

3 Quick Start

For the set up of an HIMOD of system you proceed please in the following steps:

- ➔ Determine system concept and function modules.
- ➔ Determine the function module order behind the bus coupler.
- ➔ Mount a bus connector for each module on the top-hat rail and push them together.
- ➔ Set the PROFIBUS address on the bottom of the bus coupler.
- ➔ To mount the bus coupler, snap it onto the left bus connector.
- ➔ Mount the function modules analogously in the planned order.
- ➔ Connect the bus coupler to the supply voltage.
- ➔ Set a unique address for each function module, which should start with 1 for the module next to the bus coupler, followed by module no. 2, etc. Please, don ’t leave an address gap.
- ➔ Adjusting the addresses can be done via front-panel keyboard or BlueControl ® engineering tool.
- ➔ Write the engineering for each individual function module. Determine which data should be read and /or written via the field bus (menu Bus data (read) / Bus data (write)). Note the order of selected data.
- ➔ Make the function module wiring.
- ➔ Configure the bus coupler with the order of fitted function modules. Please, specify the actually fitted device types exactly.
- ➔ This can be done via SmartControl or via the master tool for the PROFIBUS master.
- ➔ During configuration in the master tool (via GSD file), the selected slot position determines the required allocated function module address.
- ➔ Load the bus configuration into the PROFIBUS master.
- ➔ Connect the PROFIBUS cable with the device; take care to include the required bus terminating resistors.
- ➔ Start the data exchange with the PROFIBUS master!

4 Commissioning

4.1 Hints for installation

- Measurement and data lines should be kept separate from control and power supply cables.
- Sensor measuring cables should be twisted and screened, with the screening connected to earth.
- External contactors, relays, motors, etc. must be fitted with RC snubber circuits to manufacturer specifications.
- The unit must not be installed near strong electric and magnetic fields.

⚠ → **The unit is not suitable for installation in explosion-hazarded areas.**
→ **Faulty connection can lead to the destruction of the instrument.**
→ **The device may be operated only in environments for which it is suitable due to its class of protection.**
→ **The housing ventilation slots must not be covered.**
→ **In plants where transient voltage peaks are susceptible to occur, the devices must be equipped with additional protective filters or voltage limiters!**

→ **The device contains electrostatically sensitive components.**

⚠ → **Please, follow the instructions given in the safety hints.**

4.2 Dimensions

The bus coupler dimensions are shown in the following drawing. For the function module data, see the relevant operating manuals.

Fig. 2 Dimensions

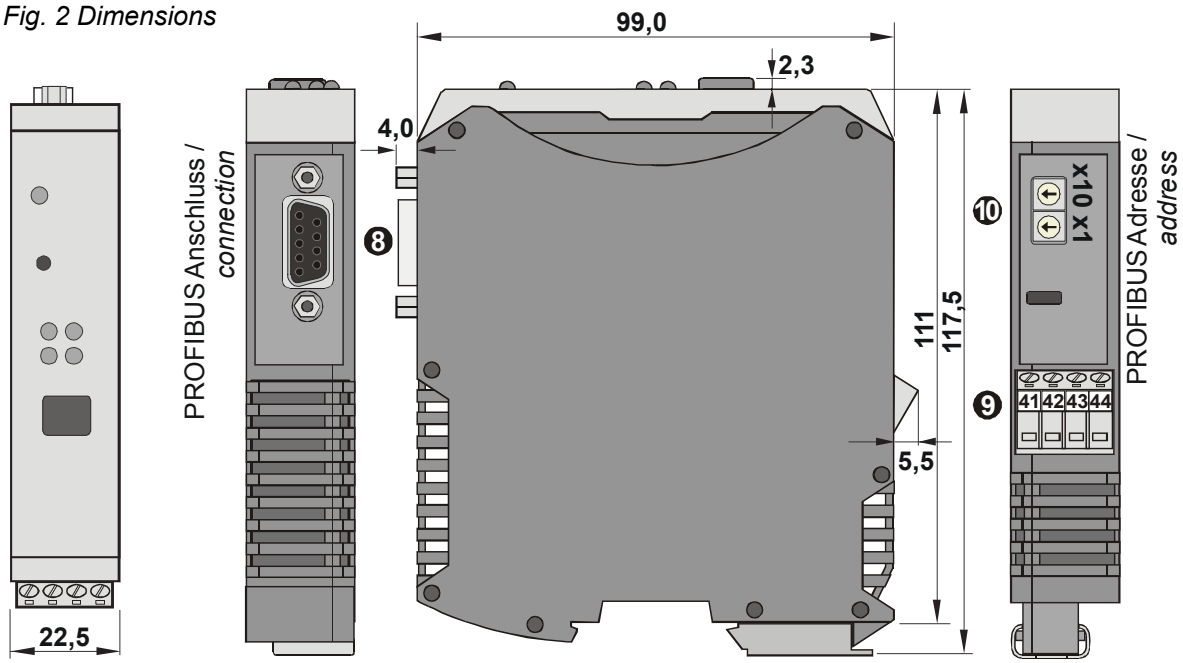

Dimensions in mm

4.3 Mounting

Connection between bus coupler and function modules is via bus connectors, which snap onto the top-hat rail. Several devices are mounted side by side with high packing density. The bus links between the devices are made directly via the bus connectors.
Proceed as follows:

1) Snap on the bus connectors (delivered with the device) onto the top-hat rail
2) For high-density mounting, push the bus connectors together.
3) Clip the instruments onto the top-hat rail via the bus connectors.

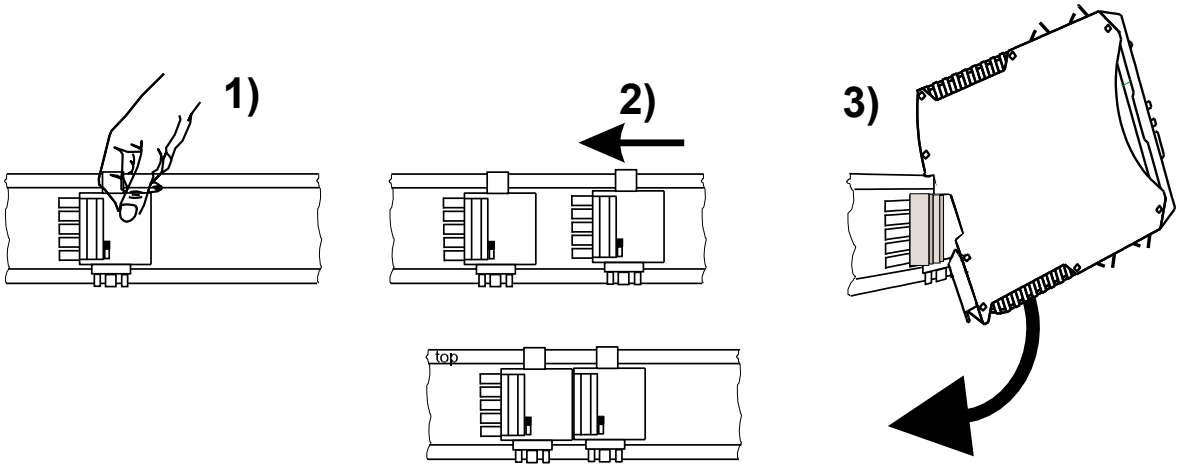

Fig. 3 Mounting steps

Fig. 4 TBUS connector

The instruments are provided for vertical mounting on 35 mm top-hat rails to EN 50022.

If possible, the place of installation should be exempt of vibration, aggressive fluids (e.g. acid, lye), liquids, dust or other suspended matters.

Instruments of the HIMOD family can be mounted directly side by side. For mounting and dismounting, the min. distance above and below the instrument from other equipment should be 8 cm.

Please, mount the bus coupler in the leftmost position and fit the function modules right of the bus coupler in the required order.

HIMOD instruments do not contain parts for which maintenance is compulsory and need not be opened by the customer.

A field bus coupler can energize max. 16 function modules. For connecting a higher number of modules the PWR power supply modules HE 5850 must be used.

4.3.1 Dismounting

Dismounting is in the inverse order of the steps described above.

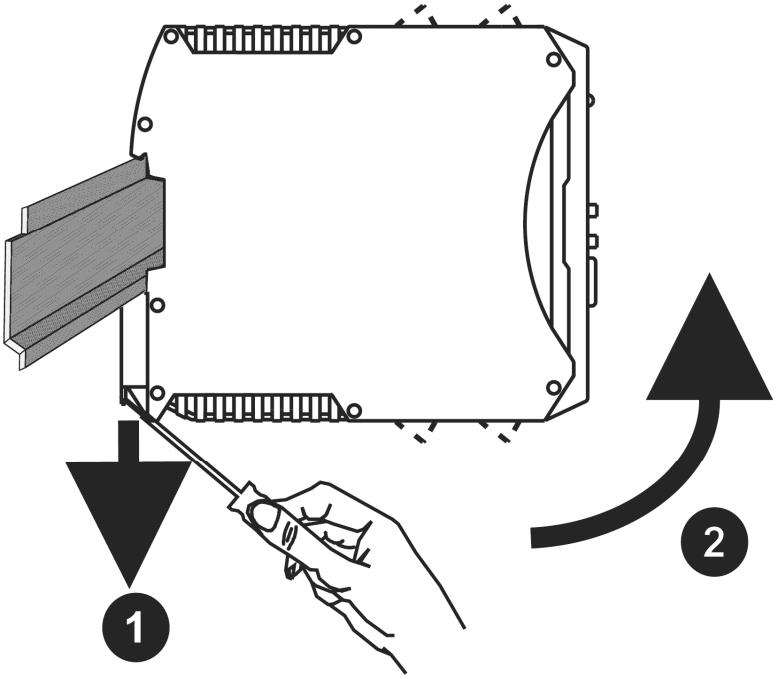

Fig. 5 Dismounting

1) Open the clamp with a screw driver blade..
2) Disconnect the modul with a twist from the bus connector.

4.4 Electrical Connections

4.4.1 Bus coupler supply voltage

A system comprising bus coupler and one or several function modules is energized centrally via the bus coupler. Central energization reduces the wiring expenditure considerably.

Fig. 6 Bus coupler energy supply

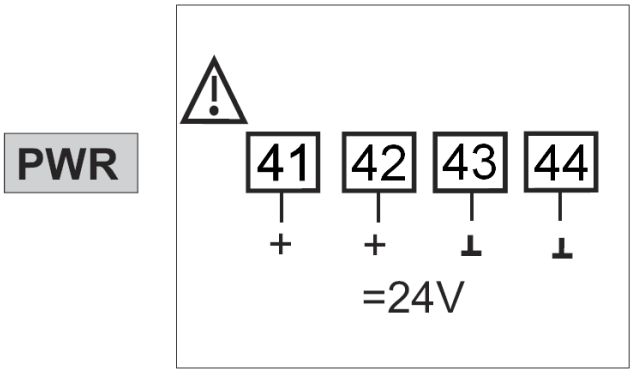

Energization at the function modules is not permissible.

A bus coupler can energize max. 16 function modules. For extension possibilities, see chapter 4.4.2.

4.4.2 Energization via Power Module HE 5850

Power supply module HE 5850 PWR is used for energization of function modules with system interface via the bus connector in the top-hat rail.
For connecting a higher number of function modules to the bus coupler than permissible for energization, additional power supply modules must be used.
Applications:

- Supplementary energization of additional function modules
- Repartition to different installation levels (e.g. two rows in a control cabinet)
- Construction of separate potential levels
- A power supply module can energize up to 16 function modules.

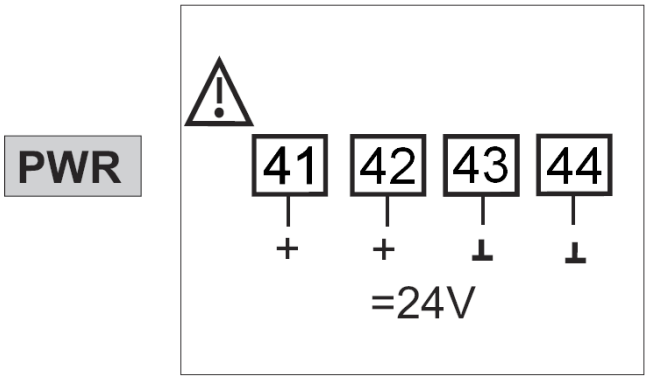

Fig. 7 Energy supply connection

Energizing at the function modules is not permitted.

High-density mounting with other partial systems is not permissible.

Cascade connection of power supply modules is not permissible (see above)

4.4.3 Bus structure

The bus is a two-wire RS 485 cable.
All bus sharing RS 485 units are connected in parallel to signals RxD/TxD-N (Data A) and RxD/TxD-P (Data B).

The bus cable characteristics are specified in IEC 61158. Cable type A is suitable for transfer rates up to 12 Mbit/s.
A twisted and screened 2-wire cable must be used.

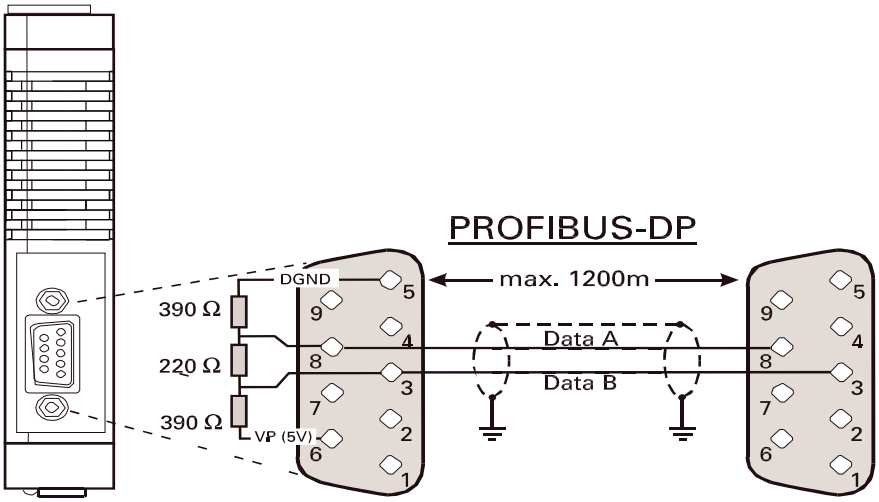

Fig. 8 Cabling possibilities

Hints:
Mount terminating resistors across Data A and B at the cable end. For procedure, see chapter 4.4.7.
For screening, see chapter 4.4.6.

4.4.4 Connector

Field bus connection is via a “standard” PROFIBUS-DP connector. The connector is a Sub-D socket to IEC 61158. Connection must be done by the customer.

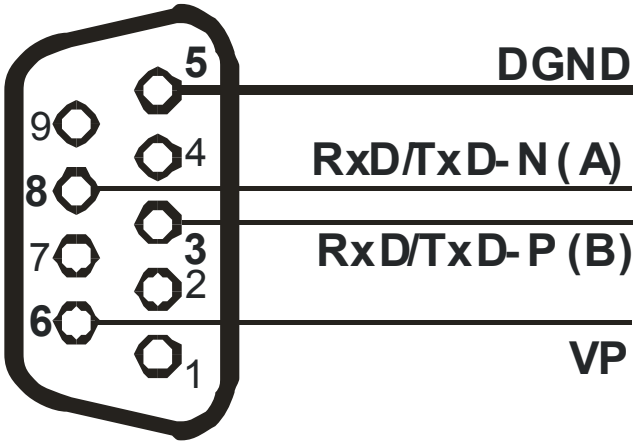

Fig. 9 Profibus connector/plug

4.4.5 Cable layout

For connecting the field instruments, suitable bus cables for the application must be used. The wiring must comply with the general hints and regulations (e.g. VDE 0100):

- Cable layout in buildings (inside and outside cabinets)
- Cable layout outside buildings

- Potential compensation
- Cable screening
- Measures against interference voltages
- Length of tap line

In particular, the following information must be taken into account:

- With RS 485 technology, max. 32 field units can be connected in a segment at a bus cable. Several segments can be coupled by means of repeaters.
- The bus topology should be a line of max. 1000m length per segment. Extension by means of repeaters is permissible.
- The bus cable connection must be a “daisy chain” between field instruments rather than star-shaped .
- If possible, tap lines should be avoided to prevent reflections causing communication trouble. With higher transfer rates, tap lines are not permissible.
- The general hints for low-interference signal and bus cable wiring are applicable (see operating note „EMC – General information“ (9407-047-09118)).
- To increase the transfer safety, pair wisely twisted and screened bus cables can be used

4.4.6 Screening

The type of screening connection is dependent mainly on the expected interference.

- For suppression of electric fields, one end of the screening must be connected to earth. Always realize this measure at first.
- However, suppression of interference due to an alternating magnetic field is possible only, when the both ends of the screening are connected to earth. With earth circuits, however, note the screening effect is reduced by galvanic interference on the reference potential.
- If several devices are linked to a single bus, the screen must be connected at each device, e.g. by means of screen clamps.
- Short distance bus screening must have a large-surface, low-resistance connection to a central protective earth, e.g. via screening terminals

4.4.7 Terminating resistors

The PROFIBUS terminating resistors must be fitted at the end of each bus cable, construction acc. to IEC 61158. We recommend using commercially available PROFIBUS connectors with integrated terminating resistors.

4.5 PROFIBUS Settings

4.5.1 Bus address

The address of a bus coupler for bus communication must be adjusted via two rotary selector switches at the bottom of the unit:
Range:

- 01…99

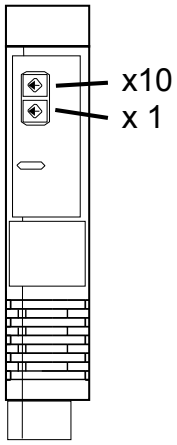

Fig. 10 Address setting (below)

Each instrument in a PROFIBUS system must have a unique address.

When defining the device address, note that allocation of the same address to two instruments is not permissible, because it is susceptible of causing faulty behaviour of the overall bus. In this case, the bus master communication with the connected instruments is not possible.

4.5.2 Communication parameters

Transfer rate / cable length

The Baudrate is a measure for the transfer rate. The permissible cable length is dependent on this rate. The bus coupler supports the following transfer rates:

Transfer rate		Max. cable length
9,6/19,2/45,45/93,75	kBit/s	1200m
187,5	kBit/s	1000m
500	kBit/s	400m
1,5	MBit/s	200m
3/ 6/12	MBit/s	100m

The transfer rate is selected automatically by the bus master

The transfer rate setting of all bus sharing units must be equal.

Process data length

The max. length of a process data message can be 244 bytes (read and write).

4.6 Displays

Five bus coupler indicator LEDs indicate various operating statuses.

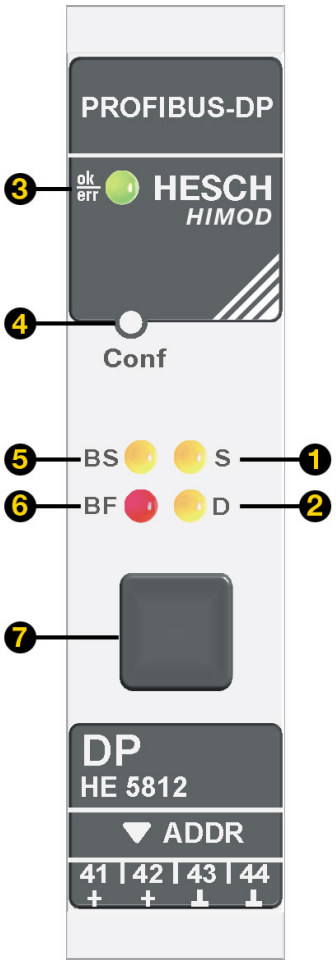

	Displays
1	*LED System bus status* *off: off* *flashing: module scan* *on: communication active*
2	*LED Diagnosis status* *on: module error, alarm*
3	*LED Device status* *green: ok* *yellow: initializing* *yellow flashing: configuration mismatch* *red: no configuration* *red flashing: module failure*
4	*Configuration push button (not implemented)*
5	*LED Fieldbus status* *off: no connection* *flashing: state Wait / Param / Config / CPU Stop* *on: data exchange*
6	*LED Fieldbus telegram fault* *off: no error* *flashing: error in parameter telegram* *on: error in configuration telegram*
7	*PC interface for the engineering tool*

Fig. 11 Display elements bus coupler

* Alternating display: “ green- yellow- red- off”: Internal error status

5 System design

Up to 16 function modules can be connected and energized at a bus coupler. System extension is possible by using power supply modules:

- Up to 62 function modules can be addressed logically by a bus coupler.
- Up to 4 installation levels can be built up.
- The max. permissible extension is 10 m.

5.1 System structure

Using power supply modules offers many advantages:

- The number of function modules connectable to a bus coupler can be extended.
- The function modules can be distributed to different levels in the control cabinet.
- A potential-isolated energy supply is possible.

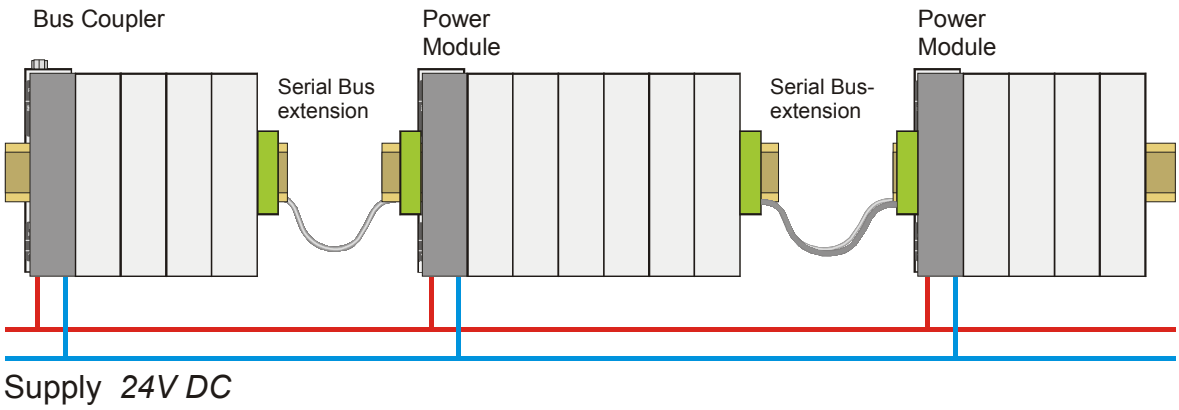

Fig. 12 System structure possibility

The overall system length including cables must not exceed 10 m. Max. 3 m cable length between two groups is permissible.

5.1.1 Hints for connection

For connecting the function modules energized by the bus coupler and the function modules energized by the power supply module, proceed as follows:

1. Insert a connector (e.g. 9407-998-07141) on the right side of the group with the bus coupler into the bus connector in the top-hat rail.

2. Insert a connector (e.g. 9407-998-07131) on the left side of the group with the power supply module into the bus connector.

3. Use twisted and screened two-wire bus cable.
   Connect conductor 1 with the lower contact S5 and conductor 2 with contact S4.

4. Terminate the system bus with a terminating resistor LT = 100.
   For this, insert a connector on the right side of the last group with a power supply module into the bus connector. Connect the resistor across terminals S4 - S5

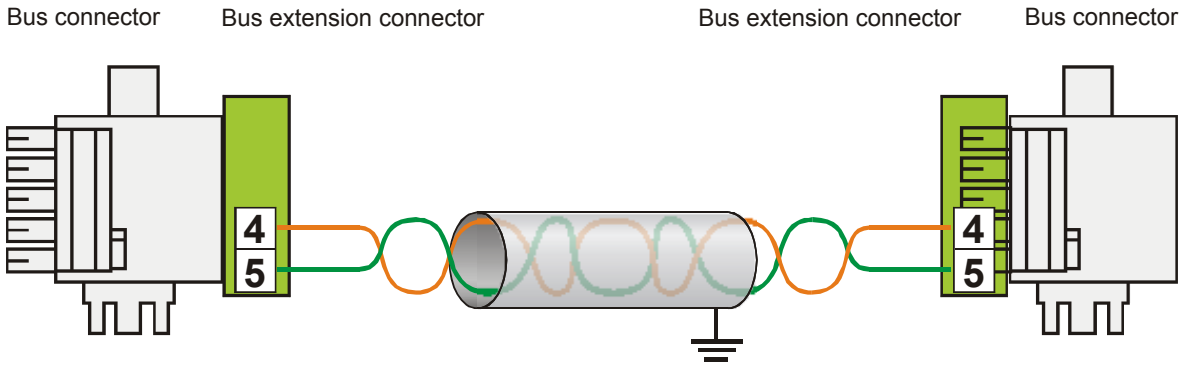

Fig. 13 Segment connection

Don’t interconnect a bus coupler and one or several power supply modules via bus connector. Connections via contacts S1 to S3 can lead to damage of the connected devices!

5.2 General System Structure

Please, follow the guidelines and instructions for building up a communication system given by the master manufacturer.

5.2.1 Minimum equipment of a PROFIBUS system

A PROFIBUS system comprises the following minimum equipment:

- a bus master, which controls the data communication,
- one or several slaves, which provide data on request by the master,
- the transfer medium, consisting of bus cable and bus connector for connecting the individual bus sharing units, one or several bus segments which are connected by repeaters.

5.2.2 Maximum equipment of a PROFIBUS system

A bus segment comprises max. 32 (active and passive) field instruments. The maximum possible number of slaves which can be operated at a PROFIBUS master over several segments is determined by the internal master memory structure. Therefore you should get information on the master capacity when planning a system.

The bus cable can be opened at any point to include another unit by adding a bus connector. At the segment end, the bus cable can be extended up to the predefined segments lengths. The length of a bus segment is dependent on the adjusted transfer rate, which is determined mainly by system constellation (segment length, distributed inputs/outputs) and required scanning cycles Abfragezyklen of individual units. The selected transfer rate must be equal for all bus units.

PROFIBUS units must be connected in line structure.

A PROFIBUS system can be extended by using repeaters for connection of more than 32 units, or for longer distances than defined according to transfer rate.

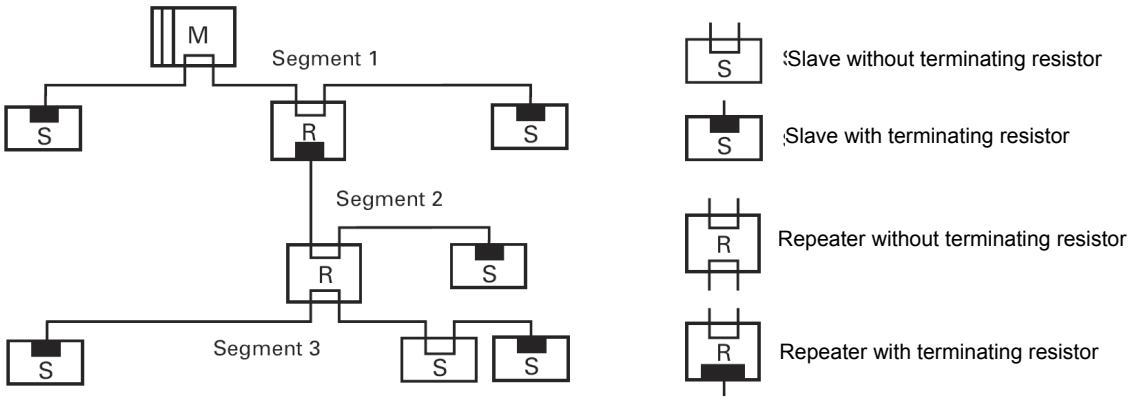

Fig. 14 Bus structure

A fully equipped PROFIBUS system can include max. 125 units with addresses 1 ... 125. Each repeater reduces the maximum number of units in a segment. As a passive unit, a repeater dos not have a PROFIBUS device address . However, its input circuitry is an additional load for the segment due to bus driver current consumption. But a repeater is without effect on the overall number of units connected on the bus. The maximum number of repeaters which can be connected in series may vary dependent on manufacturer . For this reason, you should get information on possible limitations from the manufacturer when projecting a system.

5.2.3 Wiring inside buildings

The following hints for cable layout are applicable to twisted-pair cables with screen. The screening improves the electromagnetic compatibility.
Depending on requirements, the one or both ends of the cable screen must be connected to a central earth point (PE) by means of low-impedance connections with a large surface,
e.g. screen clamps. When installing a repeater or field unit in a control cabinet, the cable screen should be connected to an earth rail mounted as close as possible to the cable entry into the cabinet.
The screening must be continued up to the field instrument and connected with the conductant housing and/or metal connector. Ensure that the earth potential of the instrument housing and of the control cabinet accommodating the field instrument is is equal due to large-surface metal contact . Mounting a screening rail on a painted surface is without effect.

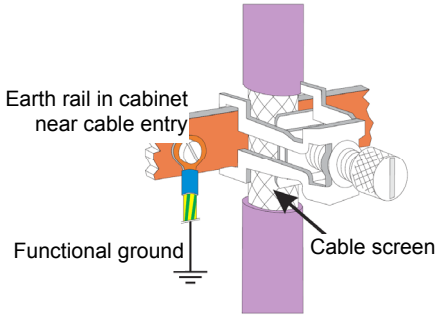

By observing these measures, high-frequency interference will be grounded reliably via the cable screens. Should external interference voltages still reach the data lines, the voltage potential will be raised symmetrically on both lines, so that in general, no destructive voltage differences can arise. Normally, a shift of the ground potential by several volts will not have an effect on reliable data transmission.
If higher voltages are to be expected, a potential balancing conductor with a minimum cross-section of 10 mm should be installed parallel to the bus cable, with connections to the reference ground of every field unit. In case of extreme interference, the bus cable can be installed in a metal conduit or channel. The conduit tube or the channel must be earthed at regular distances.

The min. distance between bus cable and other leads carrying more than 60 V must be 20 cm. The bus cable must be kept also separate from telephone cables and cables leading into hazardous areas. In these cases, we recommend installing the bus cable in a separate cable duct .

When installing a cable duct, only conductant materials connected regularly with the reference potential should be used . Mechanical stress and obvious damage of the bus cables must be avoided. Unless this is possible, special protective measures, e.g. installation in a pipe, etc. are required.

Floating installation
If the installation must be floating (no earth connection) for certain reasons, the device reference ground must only
have a high-impedance connection to earth (e.g. an RC combination). The system will then find its own earth potential.
When connecting repeaters for the purpose of linking two bus segments, a floating installation is recommended, to
prevent possible potential differences being transferred from one segment to the next.

6 Process data transmission

For flexible realization of the requirements on transfer values, memory capacity and transfer rate, the user can compose the process data transmission from a predefined selection of process data modules. This configuration is by means of the relevant bus master configuration tool.

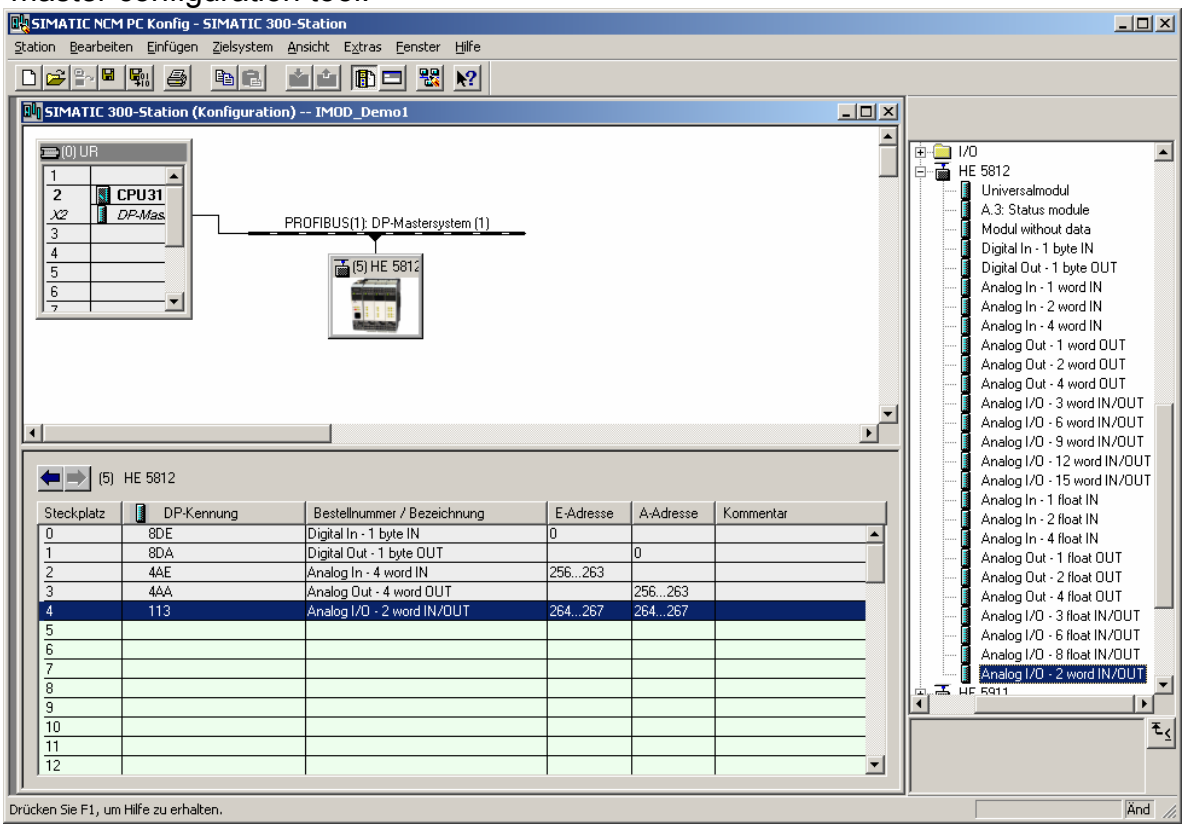

Fig. 15 Hardware configuration sample

In addition to the cyclically transmitted process data, parameter transmission on request via PROFIBUS-DP is also possible (see also chapter 1.3).
Process data and selected parameter data are written and read cyclically.
Transmitted values are taken over by the function module only in case of value change.

Data format

Values such as process values and setpoints can be transmitted in floating point format or in 16-bit FixPoint format with one digit behind the decimal point (selectable).

With FixPoint transmission, the following marginal conditions should be taken into account: For data defined as floating point values in the device, the following rules are applicable:

- The values are multiplied by factor 10. Example: 30.0 °C becomes 300.
- The transferable range is within -3000.0 and +3200.0; transmitted values beyond this range are not accepted.
- With read data out-of-range, value -3276.8 is transmitted (as an integer value -32768).

- The transmitted switch-off value is 32000 with FixPoint format and -32000.0 with floating point format.

For data which are defined as integer values in the device, conversion is omitted.
Parameter channel
Process, parameter and configuration data are accessible additionally via the parameter channel. These data are transmitted over several cycles on request.

6.1 Selectable process data modules

The cyclically transmitted process data are determined by the user during bus configuration. Predefined modules with defined content / data signification (A modules) and freely defined modules as space-keepers are available. The contents are determined via the device engineering.

6.2 Predefined objects (A.x modules)

A.x modules “Data module” are objects with pre-defined content.

A.x modules may be called up only once during bus parameter setting.

6.2.1 Module A.2: Data module : write order enabling

This module is used to enable process value write operations. When using this module

- the PROFIBUS does not take over write data with value 0;
- the write values transmitted via the PROFIBUS are taken over with value 1;
- with change from 0 to 1 all write values are written into the device again by the PROFIBUS.

Process data	Modul-ID:20hex/32dez		
read	Byte	write	Byte
1		1	

Unless module A.2 is used, the device will always store valid write data.

6.3 Freely selectable transfer object (analog modules)

A HIMOD function module is defined with each entry of a process data module into the hardware configuration. The number of data to be transmitted cyclically on the PROFIBUS is determined by selecting the process data module.

The content of transmitted data is selected in the engineering of the individual function module by means of the 'SmartControl' engineering tool. Per module, max. 15 parameters and signals for read and write are available.

The order of transmission is determined by the position.

The process data modules can be selected up to the limit determined by memory space or number of permitted modules

- max. input length of process data: 244 bytes
- max. output length of process data: 244 bytes
- max. number of modules: 62
- max. number of transmissible data (read, write per function module): 15 (integer)

Max. 16 function modules can be connected physically to a bus coupler. If energized by power supply modules, 62 function modules per bus coupler are addressable.

Definitions:
Input data: read data seen from the bus master
Output data: write data seen from the bus master.

6.3.1 Process data module "without data"

The entry of process data module "module without data" is used, unless cyclical data should be transmitted during process data exchange, although a function module is defined. Parameter setting for this entry is also necessary (s. below)

6.3.2 Process data modules in integer format

The number of data transmitted on the PROFIBUS is determined by means of the process data modules. The data content is determined in the function module engineering.

For the integer / FixPoint format, the following modules are available:

I/O-Typ	Words	Variable	Format	Modul-ID	Data per module
I	1	IN1	FixP	50hex/80dez	1 input
I	2	IN1 ...IN2	FixP	51hex/81dez	2 inputs
I	4	IN1 ...IN4	FixP	53hex/83dez	4 inputs
O	1	OUT1	FixP	60hex/96dez	1 output
O	2	OUT1 ...OUT2	FixP	61hex/97dez	2 outputs
O	4	OUT1 ...OUT4	FixP	63hex/99dez	4 outputs
I/O	1/1	IN1/OUT1	FixP	70hex/112dez	1 input /1 output
I/O	2/2	IN1...IN2/OUT1...0UT2	FixP	71hex/113dez	2 inputs /2 outputs
I/O	3/3	IN1...IN3/OUT1...0UT3	FixP	72hex/114dez	3 inputs /3 outputs
I/O	6/6	IN1...IN6/OUT1...0UT6	FixP	75hex/117dez	6 inputs /6 outputs
I/O	9/9	IN1...IN9/OUT1...0UT9	FixP	78hex/120dez	9 inputs /9 outputs
I/O	12/12	IN1...IN12/OUT1...0UT12	FixP	7Bhex/123dez	12 inputs/ 12 outputs
I/O	15/15	IN1...IN15/OUT1...0UT15	FixP	7Ehex/126dez	15 inputs/ 15 outputs

6.3.3 Process data modules in floating point format

The number of data transmitted on the PROFIBUS is determined by means of the process data modules. The data content is determined in the function module engineering.

For floating point format, the following modules are available:

I/O-Typ	Words	Variable	Format	Modul-ID	Data per module
I	2	IN1	Float	D1hex/209dez	1 input
I	4	IN1 ... IN2	Float	D3hex/211dez	2 inputs
I	8	IN1 ... IN4	Float	D7hex/215dez	4 inputs
O	2	OUT1	Float	E1hex/225dez	1 output
O	4	OUT1 ...OUT2	Float	E3hex/227dez	2 outputs
O	8	OUT1 ...OUT4	Float	E7hex/231dez	4 outputs
I/O	2/2	IN1/OUT1	Float	F1hex/241dez	1 input/ 1 output
I/O	6/6	IN1...IN3/OUT1...0UT3	Float	F5hex/244dez	3 inputs/ 3 outputs
I/O	12/12	IN1...IN6/OUT1...0UT6	Float	FBhex/251dez	6 inputs/ 6 outputs
I/O	16/16	IN1...IN8/OUT1...0UT8	Float	FFhex/255dez	8 inputs/ 8 outputs

Please, note that these data have to be transmitted always as consistent data.

6.3.4 Example: specification of the number of process data

A HIMOD system comprises five function modules, each of which includes a different number of values to be transmitted:

- Module 1: an integer value (the first value is transmitted).
- Module 2: read an integer value, write an integer value (with each operation, the first value is transmitted).
- Module 3: read three float values, write three float values (with each operation, the first three values are transmitted).
- Module 4: write four 'Word' values (the first three values are transmitted).
- Module 5: read two 'Word' values, write two 'Word' values (the first three values are transmitted

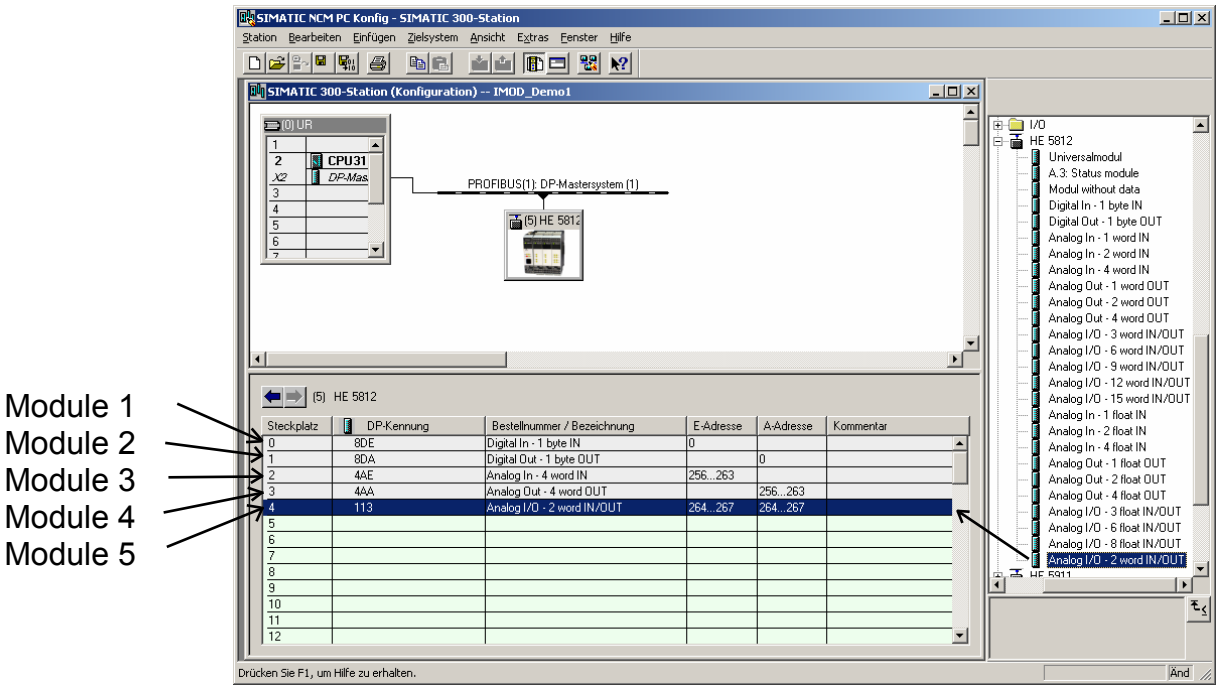

Fig. 16 Selecting the number of values on example

The order of selected process data modules determines the function module assignment. Process data module 1 defines the number of data of the function module with address 1, process data module 2 determines the number of data for the function module with address 2, etc.

7 User Parameter Setting

7.1 Parameter setting for DPV0 - Master

After selection of the process data modules, the bus coupler and function module PROFIBUS user parameters must be adjusted.

In addition to the standard parameter data, the bus coupler has also user-specific parameter data which must be set via the bus configuration tool of the relevant bus master.

Distinction of the settings which are valid for the overall HIMOD system and settings for each function module is required.

7.1.1 System wide parameter setting

The system-wide user parameter setting is valid for the function modules of a bus node. The significations of adjustable user parameter data (4th byte) are given in the following tables. These settings are not stored in the device, i.e. the default settings are activated after switch-on.

Descr.	Signification
	Reserved for DPV1. These bytes are not used for DPV0 operation

Descr	Signification	Default
Motorola / Intel format	Format for floating point values and integer values: Motorola (IEEE 754) / Intel (0 /1) For connection also to non-compatible PLCs or PC cards . Example: The Motorola format of value 123.4 is: 42 F6 CC CD	0(Motorola)
Diagnosis format (Chap. 8.2 p.31)	Extended / standard diagnosis (0 / 1) Extended diagnosis: standard diagnosis plus device-specific diagnosis. Standard diagnosis: (6 bytes) without device-	0 (extented)
Start-up presently not realized)	Data exchange start-up, if module configuration and inserted modules do not correspond Start: always start-up, data exchange with corresponding modules Don’t start: no start-up with divergences	0 (start)
reserved		0

7.1.2 Function module parameter setting

The user parameter setting comprises 3 bytes for each function module. It defines:

- the corresponding instrument type and option for each function module and
- the behaviour in case of bus failure

Device type and option must correspond with the actually inserted function modules, otherwise, error signalling will occur and no process data can be exchanged.

When starting up the PROFIBUS, the user parameter data are received in the bus coupler and stored as defined configuration. Earlier configurations are overwritten.

Configurations are pre-defined by the bus master when starting up the bus and need not be specified via SmartControl.

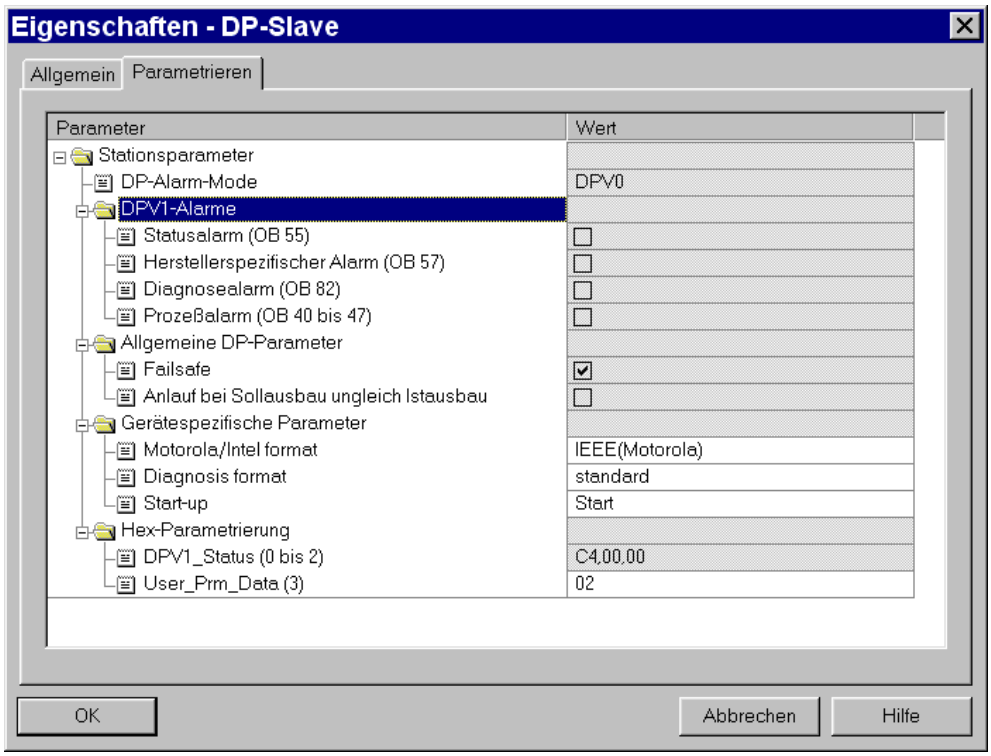

Fig. 17 User parameter setting for Bus coupler - Example

7.1.3 Fail-Safe

The fail-safe user parameter setting determines the device behaviour in case of bus failure or master 'bus stop' . In case of bus failure, the device operates according the following rules :

Fail-safe setting	Reaction in case of bus failure or master stop
last value (default)	continue with the values sent last
	forced analog inputs are set to FAIL
zero	forced analog inputs are set to FAIL
	forced digital inputs are set to FAIL
	forced outputs are set to zero
	remaining transmitted values remain unchanged
last value	presently no function (behaviour as zero)

Fail-safe condition is detected also when a faulty PROFIBUS configuration telegram or a faulty user parameter byte no. 4 was sent.

7.1.4 Example: module selection

The configuration for the bus coupler is determined via the user parameter setting .

Example: 8 channel digital input module HE5820 PNP logic

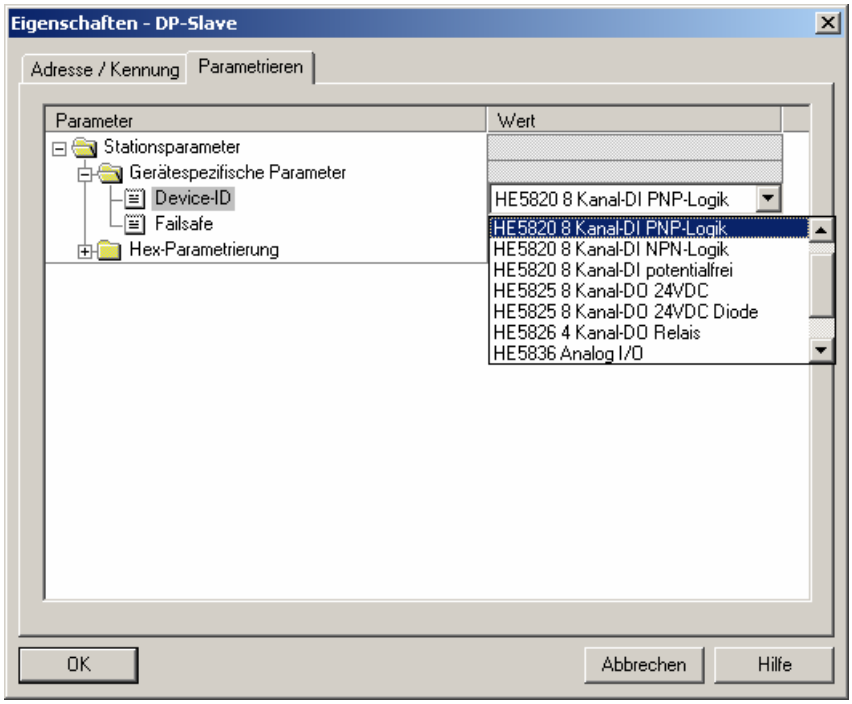

Fig. 18 Selecting the modules

The defined configuration of the function modules comprises the device type and the relevant version and options. It comprises also the allocated position / address..

Any configuration pre-defined via SmartControl is overwritten when starting up the PROFIBUS.

7.2 Parameter setting for DPV1 master

In addition to the device-specific DPV0 parameter setting, further settings for DPV1 functions are possible. These settings are made also via the relevant bus master bus configuration tool.
With the He 5812 the following functions can be selected and enabled:

- Operating mode according to DPV0
- or DPV1

The user parameter setting is valid throughout the device. The following tables explain the significations of DPV1-specific settings (byte 1 to 3). The device-specific parameters (byte 4) are described in chapter 7.1. These settings are not stored in the device, i.e. the default settings are activated after switch-on.

DPV1 status 1

	Bit	Descr.	Signification	Default
1 . Byte	0..1	reserved		
	2	WD Base 1ms	Device supports watchdog time base 1ms	1 (fixed)
	3. .5	reserved		
	6	fail-safe	Device supports fail safe mode. In clear mode, the device accepts data telegrams without data.	1 (fixed)
	7	DPV1-enable	The class 1 master determines if the device should work in DPV0 or DPV1 mode. RL DP supports the two versions	determ. by master

DPV1 status 2

	Bit	Descr.	Signification	Default
2. Byte	0	Check_Cfg_Mode	HE 5812 checks configuration data as defined in IEC 61158	0
	1	reserved		
	2	Enable_Update_Alarm	not supported	0
	3	Enable Status Alarm	not supported	0
	4	Enable_Manufacture_ Specific_Alarm	not supported	0
	5	Enable_Diagnostic_Alarm	nicht unterstützt	0
	6	Enable Process Alarm	not supported	0
	7	Enable_Pull_Plug_Alarm	not supported	0

DPV1 status 3

	Bit	Descr.	Signification	Default
3. Byte	0..2	Alarm Mode	not supported	0
	3..7	reserved		

8 PROFIBUS-DP Diagnosis information

PROFIBUS DP offers a convenient and complex possibility to process diagnosis messages due to error conditions. The HIMOD DP diagnosis information comprises standard diagnosis information (6 bytes) and additional device-specific diagnosis information. The latter can be switched off via the user parameters.

8.1 Standard diagnosis message

A standard diagnosis message comprises 6 bytes.

Standard-diagnosis

	Bit	Descr.	Signification
1 . Byte	0	Diag. Station	Does not exist (sets master)
	1	Diag.station_not_ready	Slave is not ready for data exchange
	2	Diag.cfg_Fault	Configuration data do not correspond
	3	Diag.ext_diag	Slave has external diagnosis data (Only used with diagnosis setting ”extended“)
	4	Diag.not_supported	Requested function is not supported in slave
	5	Diag.invalid_slave_response	Fixes slave to 0
	6	Diag.prm_fault	Faulty parameter setting (ident number etc.)
	7	Diag. Master lock (sets master)	Slave is programmed by other master

	Bit	Descr.	Signification
2. Byte	0	Diag.Prm_req	Slave parameters must be set again. The application has detected a condition which requires restart with a corresponding new parameter setting and configuration . In response to this diagnosis, the master realizes a start-up with predetermined parameter setting and configuration.
	1	Diag.Stat_diag	Static diagnosis (byte diagnosis bits) Due to the status in the application, the slave cannot make valid data available. As a consequence, the master requests only diagnosis information, until the slave resets this bit. However, the PROFIBUS DP status is data exchange, i.e. data exchange can be continued immediately after reset of the static diagnosis (presently not used).
	2	fixed to 1	
	3	Diag.WD_on	Response monitoring active
	4	Diag.freeze_mode	Freeze command received
	5	Sync_Mode	Sync command received
	6	reserved	
	7	Diag.deactivated	(Set by the master)

	Bit	Descr.	Signification
3. Byte	0..6	reserved	
	7	Diag.ext_overflow	This bit is set by the slave, when the number of diagnosis data exceeds the capacity of the available diagnosis data memory area.

	Bit	Descr.	Signification
4. Byte	0..7	Diag.master_add	Master address after parameter setting (0xFF without parameter setting)

	Bit	Descr.	Signification
5. Byte	0..7		Ident number (high-byte); 0x09

	Bit	Descr.	Signification
6. Byte	0..7		Ident number (low-byte); 0xAC

8.2 Device-specific diagnosis

The following device-specific diagnosis (during DPV1 mode: status messages) can be switched off via user parameter setting (section 7 p.25). This permits switching over to the standard diagnosis, e.g. for earlier DP masters which do not support all the functions, or when displayed diagnosis information is not of interest.
Structure from Byte 7:

- Length information (1 byte)
- Bus coupler: software version (1 byte)
- Bus coupler: reserve (2 bytes)
- Per function module: alarm and status information (7 bits) / (max. 55 bytes)

	Bit	Descr.	Signification
7. Byte	0..5	Header byte	Length in bytes incl. Headerbyte
	6,7		always '0' '0'

	Bit	Descr.	Signification
8. Byte	0..7	Software version	Bus coupler software version, e.g. V1.2 = 0C hex

	Bit	Descr.	Signification
9. Byte	0..7	Reserve	Bus coupler: reserve

	Bit	Descr.	Signification
10. Byte	0..7	Reserve	Bus coupler: reserve

	Bit	Descr.	Signification
11. Byte	0	Module 1 - alarm type 1	Bit 0: alarm type 1 (e.g. sensor break, short circuit ...)
	1	Module 1 - alarm type 2	Bit 1: alarm type 2 (e.g. stored alarm, heating current alarm...)
	2	Module 1 - status type 1	Bit 2: status type 1 - device error or information (E.1 … E.4, Inf.1, Inf.2)
	3	Module 1 - wrong output value	Bit 3: transmitted values out of defined limits (e.g. setpoint out of setpoint range)
	4	Module 1 - communication error	Bit 4: communication error (e.g. communication with module failed, device missing ...)
	5	Module 1 - device configuration mismatch	Bit 5: defined configuration unequal to actual configuratio
	6	Module 1 - reserved	
	7	Module 2 - alarm type 1	Bit 0: alarm type 1 (e.g. sensor break, short circuit ...)

	Bit	Descr.	Signification
12. Byte	0	Module 2 -alarm type 2	Bit 1: alarm type 2 (e.g. stored alarm, heating current alarm...)
	1	Module 2 - status type 1	Bit 2: status type 1 - device error or information (E.1 … E.4, Inf.1, Inf.2)
	2	Module 2 - wrong output value	Bit 3: transmitted values out of defined limits (e.g. setpoint out of setpoint range)
	3	Module 2 - communication error	Bit 4: communication error (e.g. communication with module failed, device missing ...)
	4	Module 2 - device configuration mismatch	Bit 5: defined configuration unequal to actual configurati
	5	Module 2 - reserved	
	6	Module 3 - alarm type 1	
	7	Module 3 - alarm type 2	

Please, note that the diagnosis values are not displayed correctly by earlier Simatic® S7 masters.

9 Engineering via PROFIBUS

The field bus coupler can be used to download a complete engineering from SmartControl , or to read it from the field bus coupler into the PC. This feature permits construction of central engineering stations without passing the data e.g. through a PLC. The HE 5812 supports up to two acyclical connections to class 2 masters and one connection to the class 1 master.

To set up an acyclical connection process as described below:

- Determine the target rotation time
- Set up SmartControl transmission.

9.1 SmartControl via PROFIBUS-DPV1

Data transmission between SmartControl and the field bus coupler is easy using the DPV1 functions. Both a complete engineering and operating functions as well as trend recording can be transmitted or realized.

Engineering tool SmartControl from version 1.5 supports PROFIBUS PC cards made by Hilscher, e.g. CIF50-PB, CIF60-PB, firmware version 1.0.71

Engineering tool SmartControl from version 2.4 supports additionally PROFIBUS PC cards made by Siemens, e.g. CP5613.

How to make the settings required at the engineering tool and for the PROFIBUS card is explained below at the example of a PC card from Hilscher.

9.1.1 CIF card settings

Case 1: The instrument is not integrated into a PROFIBUS network.
The CIF card (Communication Inferface) must be initialized with master address and Baudrate (see Fig 19 as an example).

Case 2: The instrument is integrated into a network with other DP masters, e.g. S7.
A free master address must be allocated to the CIF card. Adjust the Baudrate already used at the master.

The target rotation time must be matched and adjusted on all masters connected on the PROFIBUS (see below).

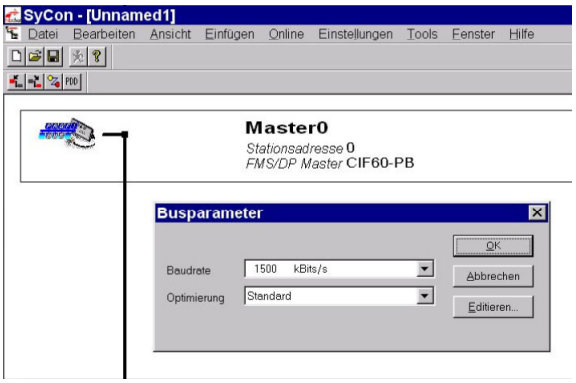

Fig. 19 C2 –Configuration of the master

Only the CIF card needs to be defined as C2 master (no device required as slave).

Case 3: The device is integrated into an engineering with the selected CIF card as a slave. Access to the device is as a C1 communication. For description, see chapter 10.2, p.38 .
Subsequently, the bus coupler must be connected with the CIF card.

9.1.2 SmartControl Settings

- Choose field “PC connection” to select the communication channel to SmartControl® with PROFIBUS 1 to 4 (max. 4 PROFIBUS cards can be fitted in the PC.)
- Specify the address (PROFIBUS address) to define the device to be selected.

For transmission from SmartControl, we recommend the following settings when using Hilscher interface cards:
Device: set “Motorola = 0” as user parameter Motorola/Intel format.
DP master: set “low/high byte” as memory format Byte””

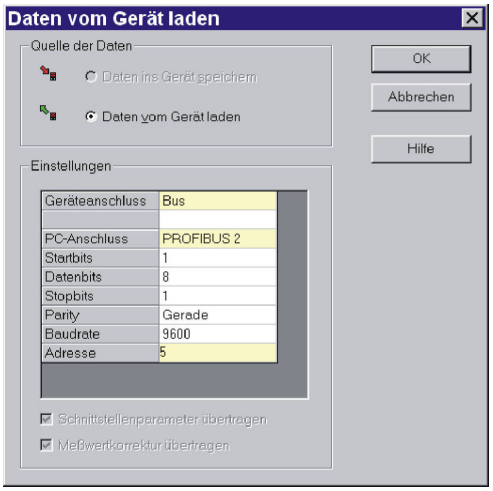

Fig. 20 Select transmission channel

If no communication with the Hilscher interface card can be established, the causes can be e.g.:

- The device contains an earlier software version (error message -7)
- The device is defined as a DPV0 slave and access to the device by the engineering tool is via a class 1 master (error message 1132).
- The max. channel data length in the device DPV1 settings is too low (error message 1132). The device is designed for 240 bytes.
- There is no communication to the device (error message 1129).
- The target rotation time is too small by design (error message 1129).

Only one engineering tool per device is possible at a time to be in data exchange**.**

9.2 Hints for DP master set-up

For smooth operation, the following settings of the DP master are required:

- Enable the DPV1 functionality at the master and for the selected device.
- If necessary, define the “max. channel data length “ (240 bytes).
- Check or set the target rotation time.

The target rotation time (Ttr) must not be adjusted to a too low value, otherwise, the acyclical message cannot be handled. This time defines the maximum available time for a token cycle during which all active DP masters get the sending right once.

When using one or several class 1 master(s) and one or several class 2 master(s) in a multi-master system, the target rotation time must be set to the same value with all masters, e.g. the total of all single times.

With low PROFIBUS transfer rates (9,6 or 19,2 kBit/s), the preset target rotation time must be increased by at least factor 5.

A faulty target rotation time can lead to communication trouble..

The DPV1 transfer times are dependent on Baud rate, total number of transmitted data and length of transferred data in the addressed instrument. Example: typical values for transmission of an instrument engineering are within 15 sec. and 3 min.

10 Quick Entry

10.1 Example SIMATIC® S7

The examples in this chapter show how to build up a DPV0 communication with a HIMOD PROFIBUS system and a SIMATIC S7 easily..

Test environment

For the test set-up, the following components are required:

- Programming unit or PC with PC adaptor
- Programming tool STEP®7 ? V5.0
- Automation unit
  – e.g. CPU S7 315-2 DP, latest version (AG)

Components

- e.g. HE5812DP
- one or several devices from the HIMOD series
  - e.g. digital input module HE 5820
  - e.g. digital output module HE 5825
  - e.g. analog input module HE 5836
- Cable
  - PROFIBUS cable automation unit ⇔ Profibus coupler with PROFIBUS connectors and integrated terminating resistors programming unit ⇔ automation unit.

Task

Example of a test environment::

- Connection of an HIMOD DP with address 5 to a CPU CPU315-2 DP via PROFIBUS-DP
- Process value display of the connected function modules
- The process values should be transmitted as integer value (1 value).

ⓘ Before taking the test environment into operation, ensure the automation unit does not contain a different user software (“initial delete”).

Procedure

Procedure:

- Snap the bus connector onto the top-hat rail.
- Configure the HIMOD DP bus coupler
  - Set address 5 and snap the device onto the top-hat rail.
  - Connect the supply voltage
- Configure the required function modules.
  - Click the device in position on the top-hat rail.
  - Address the modules (starting from #1, via front-panel key or SmartControl).
  - Load the engineering into the device.
  - Select “Bus data (read)” as process value in Signals\Device\C.Inp via SmartControl in parameter setting mode.
- Make the connections (PROFIBUS)
  - Activate the bus terminating resistors.
- PROFIBUS-network configuration
  - Define device in Step®7 - HW - Config

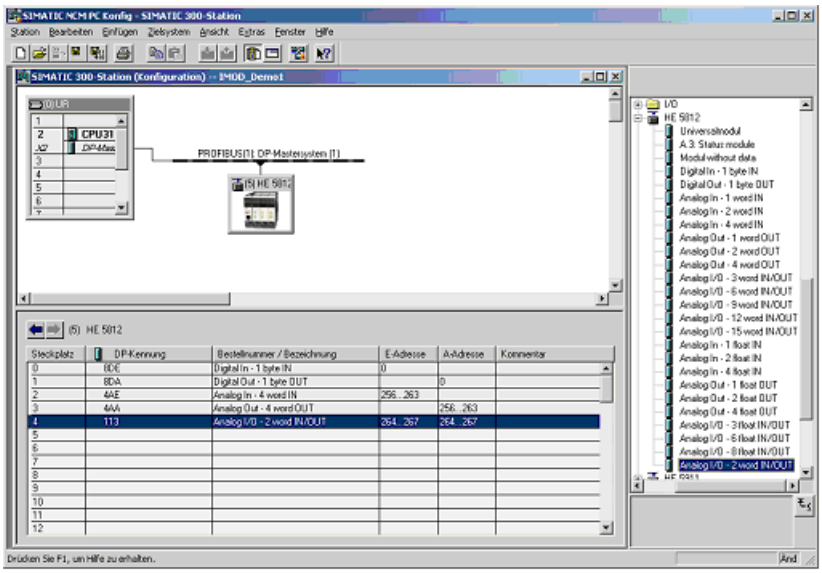

Fig. 21 Step7 Selecting the modules

- User parameter setting
  - Perform a system-wide parameter setting

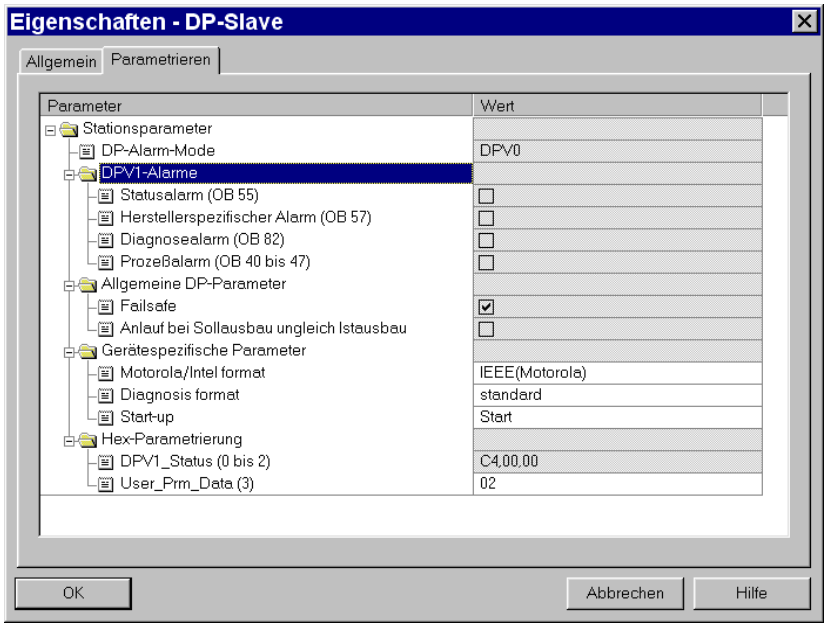

Fig. 22 User parameter setting for Bus coupler - Example S7

  - Set the function module parameters

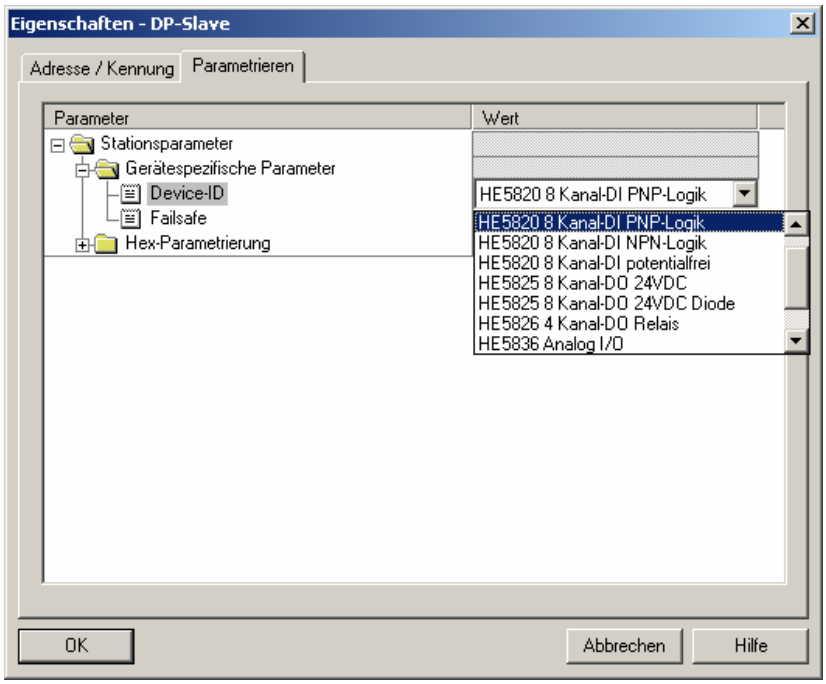

Fig. 23 Selecting function modules

- Transmit the hardware configuration to the DP master.
- Switch the automation unit to Run

- Set up a variable table in monitor mode and display the measured values.

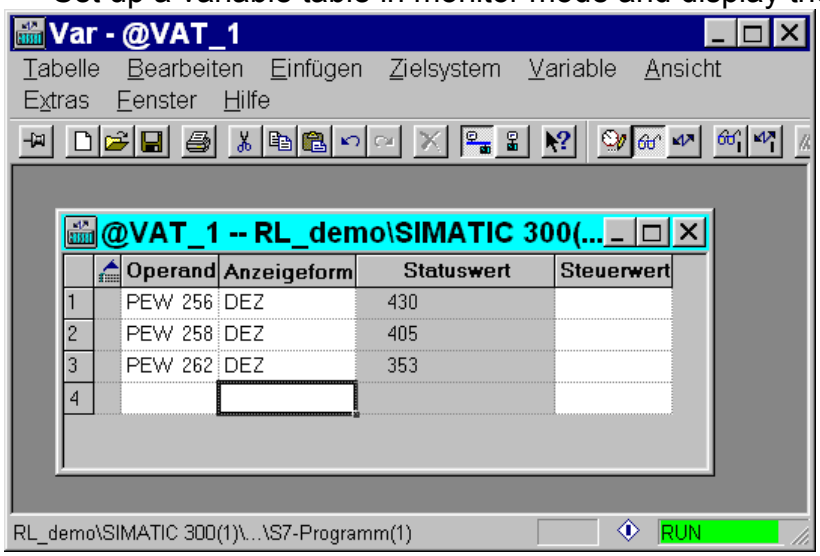

Fig. 24 Monitor representation

10.2 Example - Hilscher Interface card

10.2.1 Versions for DPV0

The examples in this chapter show how to build up a DPV0 communication with an HIMOD PROFIBUS system and a make Hilscher interface card easily.

Test environment

For the test set-up, the following components are required:

- PC / notebook
- SyCon® system configurator
- a CIF® interface card
  - e.g. CIF50-PB, CIF60-PB⇔

Components

- e.g. HE5812DP
- one or several devices from the HIMOD series
  - e.g. digital input module HE 5820
  - e.g. digital output module HE 5825
  - e.g. analog input module HE 5836
- Cable
  - PROFIBUS cable between automation unit ⇔ HIMOD DP with PROFIBUS connectors and integrated terminating resistors programming unit ⇔ automation unit

Task

Test environment example:

- A HE5812 with address 5 should be connected to a CIF60-PB via PROFIBUS-DP.
- The process values of the connected function modules should be displayed.
- The process values should be transmitted as integer value (1 value).

Before taking the test environment into operation, ensure that the automation unit does not contain a different user software.

Procedure

Procedure:

- Snap the bus connector onto the top-hat rail.
- Configure the HIMOD DP bus coupler.
  - Set address 5 and snap it onto the top-hat rail.
  - Connect the supply voltage
- Configure the required function modules
  - Click the devices in position on the top-hat rail
  - Address the modules(starting from #1, via front-panel keys or SmartControl)
  - Select “Bus data (read)” as process value in Signals\Device\C.Inp via SmartControl in parameter setting mode.
  - Load the engineering into the device.
- Make the connection (PROFIBUS)
  - Activate the bus terminating resistors..
- PROFIBUS-network configuration
  - If necessary adapt addresses and bus master hardware configuration and transmit them to the DP master(menu Online\Download).
  - Start the communication.

Procedure and typical settings for this example are shown in the following figures:

- **Network structure**

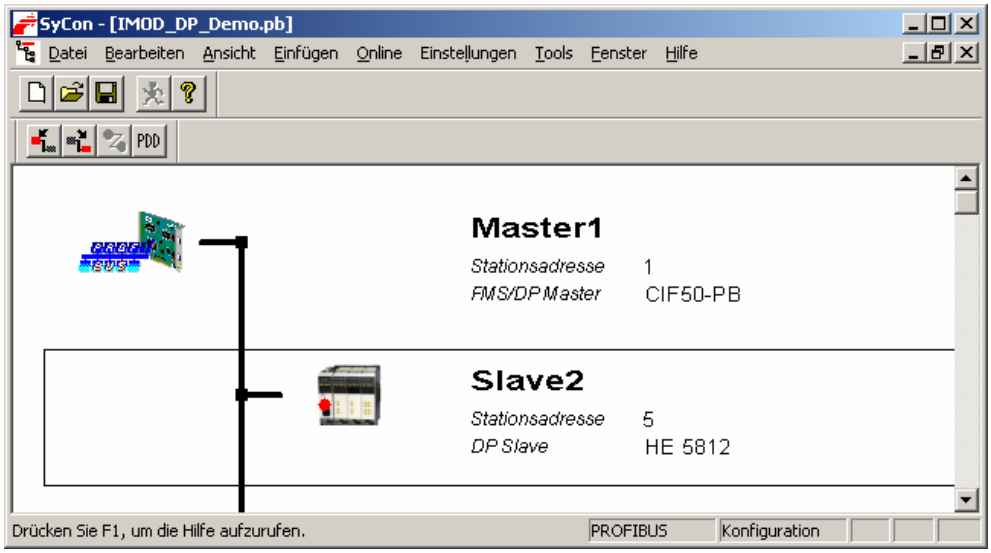

Fig. 25 Example network structure for SyCon

- **Selection of process data modules**

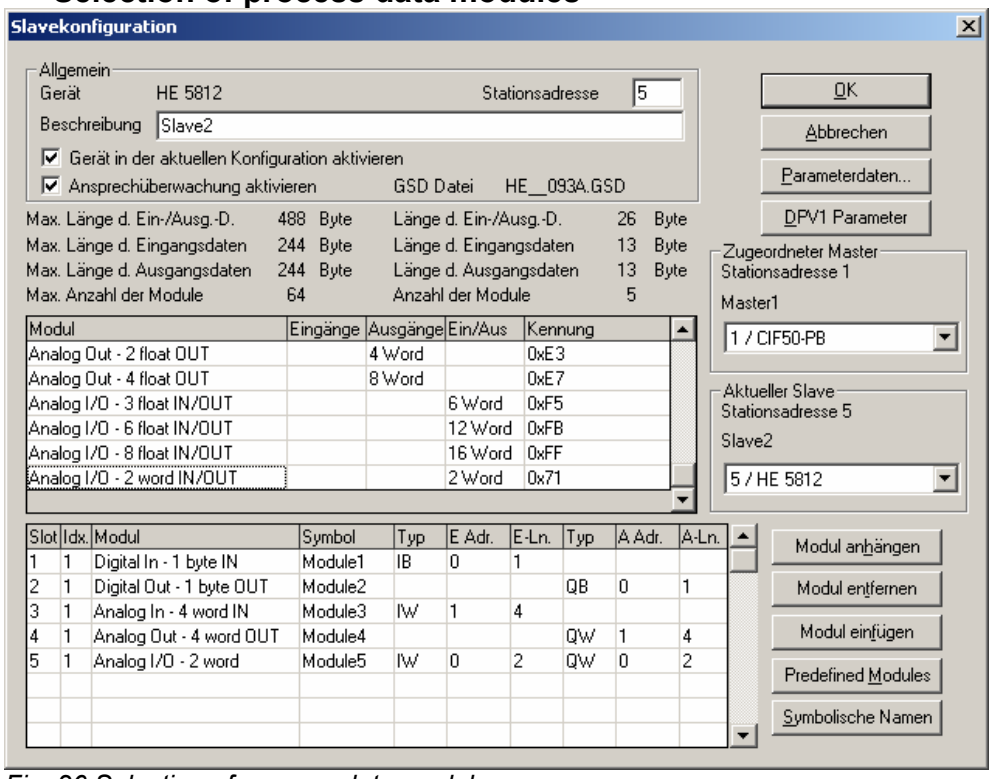

Fig. 26 Selection of process data modules

- **System-wide DPV0 user parameter setting**

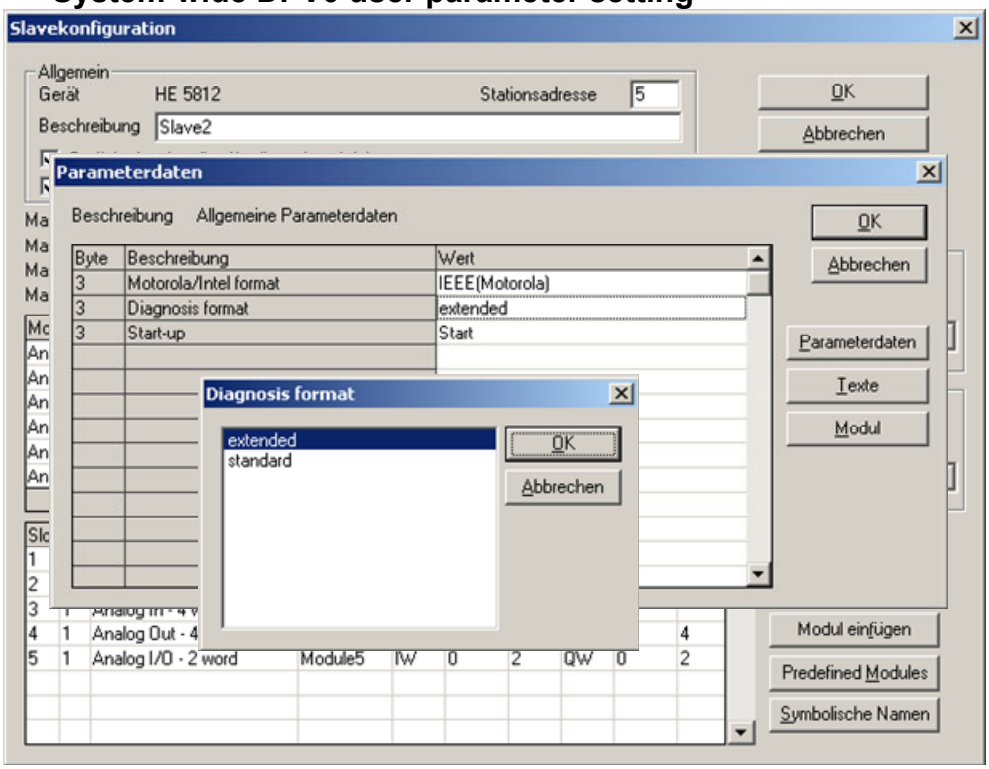

Fig. 27 DPV0 user parameter setting

- **Function module parameter setting**

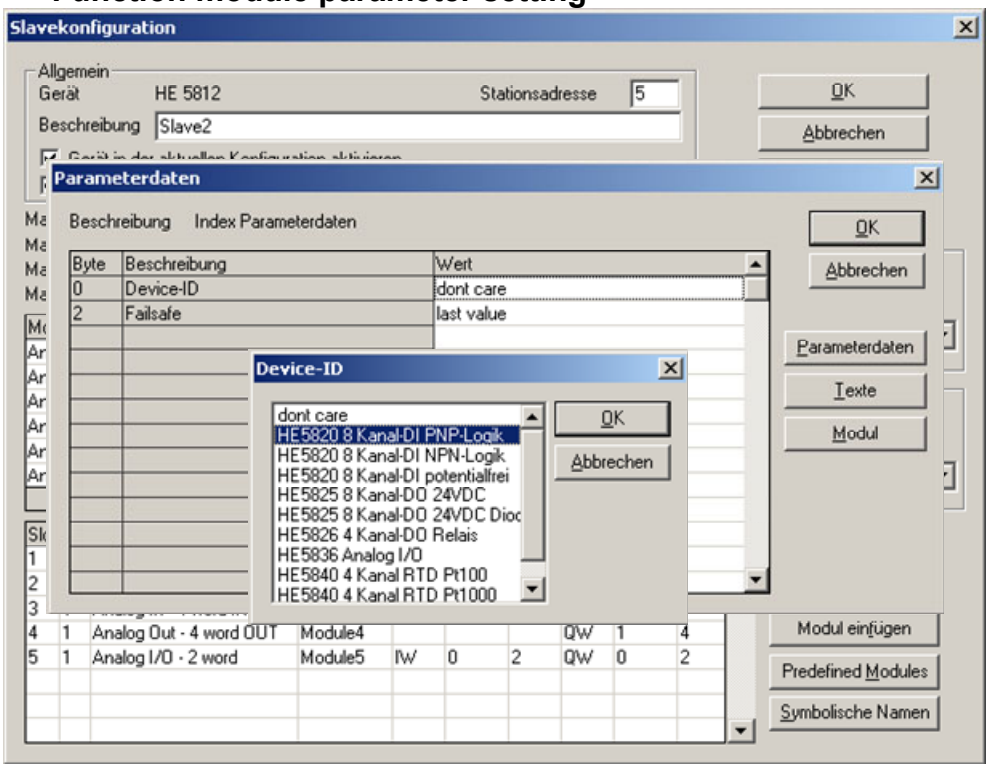

Fig. 28 Parameter setting of the function modules

- **Master-settings**

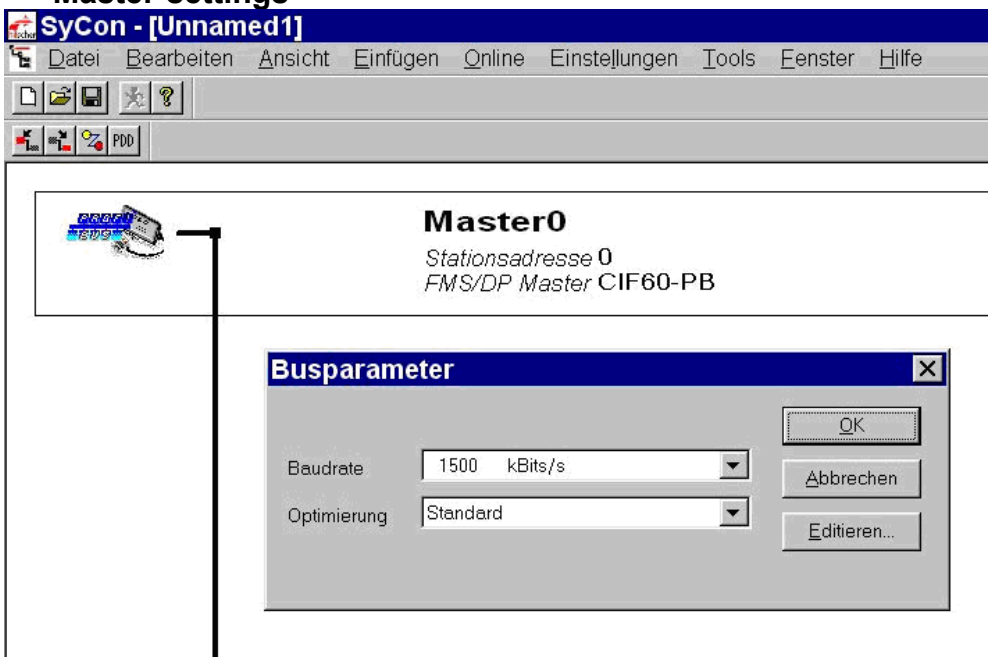

Fig. 28 Master settings SyCon

For consistent data transmission, “buffered” transmission procedure must be selected. The memory format must be set to “Little Endian” (Motorola)

- **Data can be displayed in the network view.**

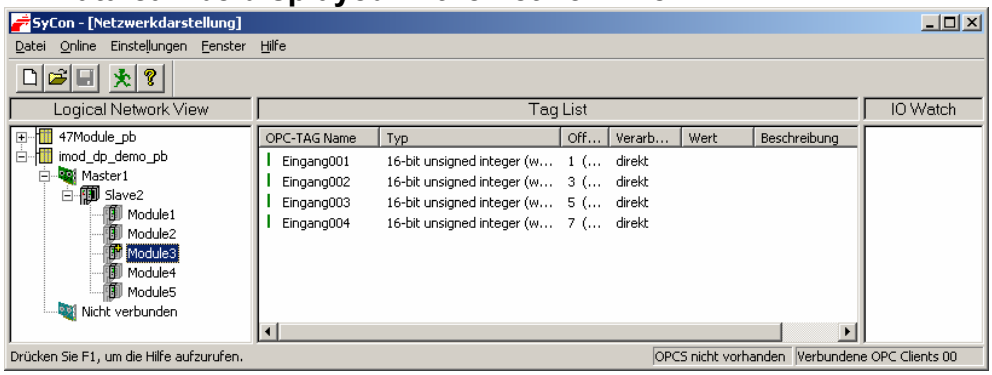

Fig. 29 Network-view

10.2.2 Versions for DPV1

HIMOD DP can be defined as DPV1 slave. Possible settings are given on the following picture..

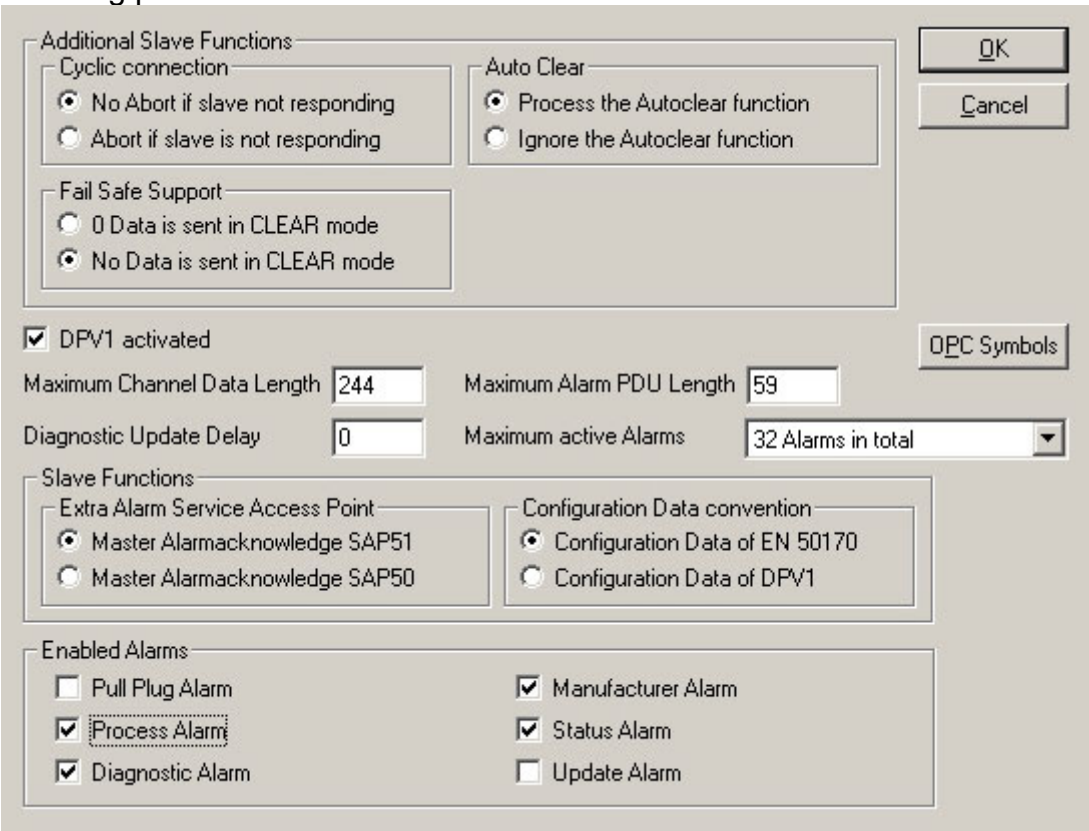

Fig. 30 DVP1 parameter settings

11 Engineering Tool SmartControl

This chapter describes hoew to handle the SmartControl system assistant for HIMOD instruments.

The procedure described below is not necessary with the PROFIBUS-DP bus coupler HE 5812because the settings are made via the bus master parameter setting tool.

11.1 Defining the configuration

Before taking a field bus node into operation, the configuration must be defined. Enter order, function module type and device version.

The coupler module selected in **Device selection** is always set into position ”0" automatically. This is the head station of the HIMOD system. All communication via the field bus is via this module.
The following modules are called function modules..

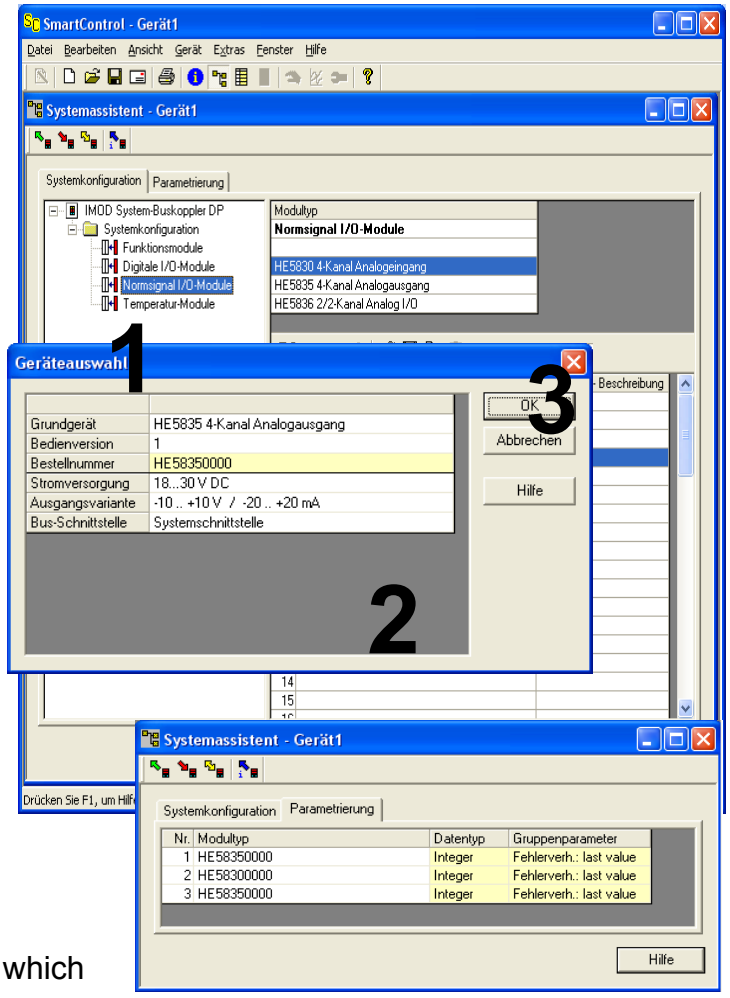

1. Select the function module type by means of double click on the module or by clicking on the function module and on button “Add entry” (1) in window “System configuration”

2. Define the exact device configuration.

Only versions with 24V and system interface are permissible..

3. Determine the order. The order can be changed by one position at a time using “Move entry up” (3) or “down” (4). Click on button “Remove entry” (2) to remove an entry.

Allocated buttons:

(1) (2) (3) (4)

See also on-line help of the tools, which can be called up via button “Help”..

4. On page “Parameter” , the module settings for the behaviour in the system are adjustable.

- The data type describes the format of process data transmitted via the bus (integer / floating point)
- The group parameter determines which values are output by the modules in case of bus transmission failure between external master (PLC) and bus coupler..

5. Assign addresses 1 to n (via front panel keys or engineering tool) to the function modules in mounting order starting at the coupler).
6. The defined configuration is sent to the bus coupler via the front-panel interface, and stored.

Unless the defined configuration corresponds to the actually provided function modules, an error is output

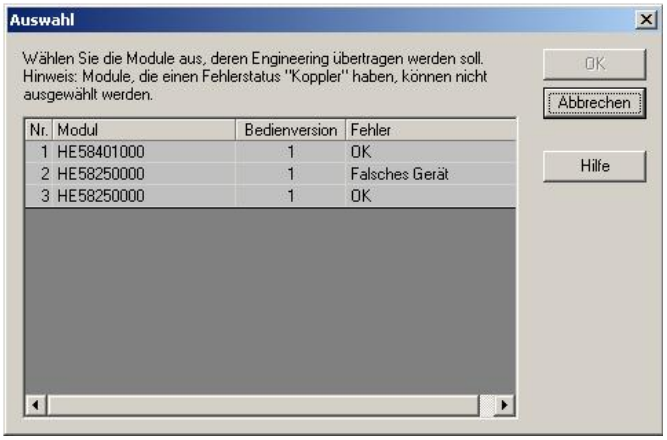

Fig. 33 Error view

Error message explanation

Error	Description	Causes
OK	Everything ok	
Coupler (01)	Communication error	• Module not fitted • Module failed • Error on system bus
Coupler (02)	Deviation from defined configuration	• Defined configuration does not correspond to the fitted module.
Module (01)	A sensor alarm was output	• Sensor break detected • Short circuit or wrong polarity detected
Module (02)	A limit value was exceeded	• Limit value exceeded • Heating current alarm generated
Module (04)	Device-specific information	• Device error occurred • Maintenance manager signal (operating hours, number of switching cycles)
Module (08)	Write value out of limits	• Setpoint out of adjusted limits • Value out of permissible limits

The error code digits are in HEX format.

Error messages can be generated also in combination.

Examples:

- Module (03) = exceeded limit value + sensor alarm
- Coupler (03) = communication error + configuration divergence; cause e.g. faulty module address
- Module (0E) = exceeded write value + device error + limit value exceeded..

Reset of error messages can be displayed also only after a second read operation

11.2 Comparison with actual configuration

When loading the engineering from the field bus coupler, the defined configuration is read. Unless error “coupler (xx)”
is displayed, the defined configuration corresponds to the actual configuration..

11.3 Viewing the process data on the bus coupler

On on-line connection to the bus coupler is built up via button “Connection to device”. The following information per configured function module is provided:

1. Function module type with position number
2. Error status (see below)
3. Read process data, values read by the module (defined in the module engineering)
4. Written process data, data written by the bus coupler (defined in the module engineering)

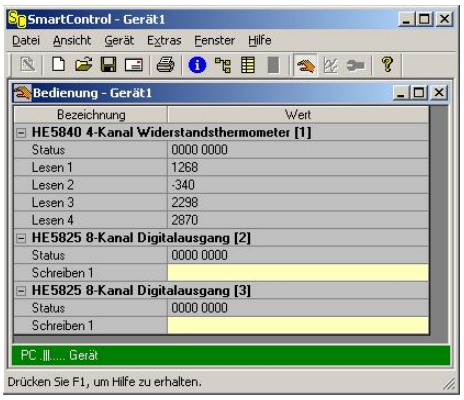

Fig. 34 Process data view

Status information structure:

D7	D6	D5	D4	D3	D2	D1	D0

Bit-no.	Signification (with Dx= 1)	Cause	corrosponds to error
D0	Sensor alarm generated	• Sensor break detected • Short circuit or wrong polarity detected	Modul (01)
D1	Limit value exceeded	• Limit value exceeded • Heating current alarm generated	Module (02)
D2	Device-specific information	• Device error detected • Maintenance manager signal (operating hours, number of switching cycles)	Module (04)
D3	Write value out of limits	• Setpoint out of the adjusted limits • Value out of the permissible limits	Module (08)
D4	Communication error	• Module not pluged • Modul failed • Error on system bus	Coupler (01)
D5	Divergence from defined configuration	• Defined configuration does not correspond to actually inserted module.	Coupler (02)
D6-D7	reserved		

Write values can be defined during on-line mode, unless a field bus interface is connected.

11.4 Processing a function module engineering

11.4.1 Individual engineering

A device engineering can be transmitted into the function module in different modes:

- Connection via the module front-panel interface.
- connection via the bus coupler front-panel interface and further transmission via internal system bus

In the second case, the module is addressed as follows::

1. Click on the selected module in the system assistant.
2. Click on button “Parameter and configuration” or select menu “View - Parameter”.
3. Load the device engineering from the module, process it and restore it in the device.

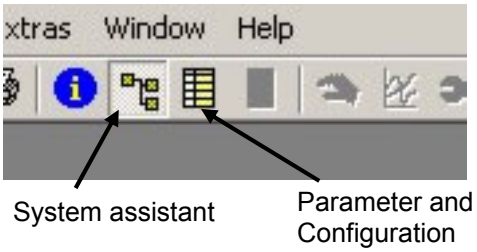

Fig. 35 Function module engineering